COGES AS A FUTURE OF MARINE PROPULSION PLANTS

Romuald Cwilewicz, Zygmunt Górski
Gdynia Maritime University
Department of Marine Power Plants
Poland

ABSTRACT

The paper presents results of analysis concerning type of seagoing ships propulsion plants concerning efficiency, kind of fuel used and influence of propulsion plant operation on marine environment. Application of innovatory combined turbine propulsion plants where gas turbines are thermodynamically connected with steam turbines allows achievement of high efficiency about 60%. Modern design of turbines and using natural gas as a fuel are very important. Gas fuel is characterised by lowered harmfulness for environment than traditional heavy fuel oil. Particularly gas fuel does not contain sulphur and gas fuel exhaust gases are free of solid particles. Additionally calorific value of gas fuel is 25% higher than heavy fuel oil thus the amount of exhaust gases and carbon dioxide emitted to atmosphere are reduced.

INTRODUCTION

The development of ship propulsion in the aspect of ship economical operation, environment protection and propulsion efficiency (*Triple E – Economy, Environment, Efficiency*) is the standard of contemporary shipbuilding. The standard is based on use of most modern design of diesel engines, deep waste heat utilisation in engine rooms and efficient operation of ships (mainly economic operational speed of ship).

Total efficiency of contemporary marine main propulsion diesel engines is the highest in history achieving 50÷51%. Such high results are obtained by application of high combustion parameters, high supercharging air pressure, electronic timig of injection and combustion and application of power turbines. These means caused considerable complications in construction and difficulties in engine operation. High professional qualifications of engine crew and high standards of engine operation and maintenance are necessary.

Environment protection demands caused necessity of natural gas use as a fuel for ship engines. Burning of natural gas is considerably less harmful for environment than the same of traditional fuels crude oil origin, particularly burning of heavy fuel oil. In turn the use of natural gas causes further difficulties in design and operation of ship low speed diesel engines due to necessity of use natural gas in high pressure. Complicated technical system is from the very beginning damageable and susceptible operation disturbances and failures. Computerised control systems are necessary due to limited human possibilities and perception.

Analysis carried out in Department of Marine Propulsion Plants of Gdynia Maritime University show that further development of ship propulsion should course to application of most modern turbine propulsion. Turbines are the simplest heat engines. They are characterised by high reliability and easy operation. The disadvantage of turbines is lower efficiency than diesel engines. That is why diesel engines dominate in competition for type of ship propulsion plant in contemporary shipbuilding. However, considerations concerning turbine propulsion result in statement that combined turbine propulsion systems can achieve the same or even higher efficiency than diesel engine propulsion systems. It is possible when COGES type combined turbine propulsion system is used.

1. COGES TYPE COMBINED TURBO-ELECTRIC PROPULSION SYSTEM

Marine combined COGES type propulsion system (Combined Gas Turbine and Steam Turbine Electric Drive System) consists in electric ship propulsion where electric energy is delivered by thermodynamically connected gas and steam turbogenerators. An example of COGES propulsion system is shown in figure 1.

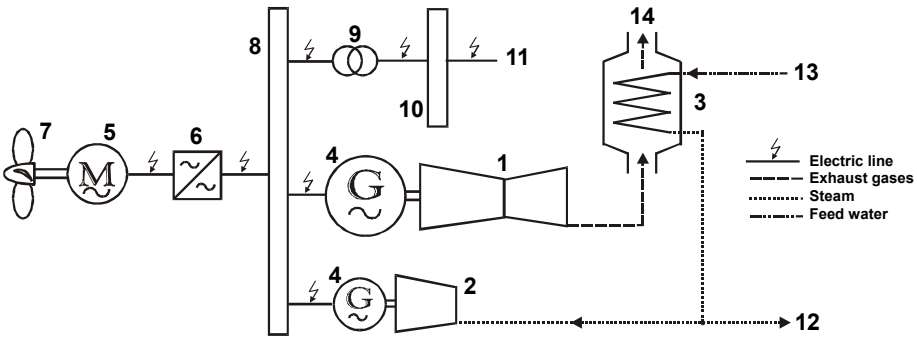

Fig. 1. Marine COGES type propulsion plant

1 – gas turbine; 2 – steam turbine; 3 – waste heat boiler (HRST); 4 – generator; 5 – electric motor; 6 – frequency converter; 7 – propeller; 8 – high voltage switchboard; 9 – transformer; 10 – low voltage switchboard; 11 – ship electric network supply; 12 – heating steam; 13 – feed water; 14 – exhaust gases outlet

Ship electric power station consists of gas turbogenerator (1, 4) and steam turbogenerator (2, 4). Electric power supplies electric motor 5 driving ship propeller 7 and ship electric network (11). Gas turbine 1 exhaust gases are used for steam generating in waste heat boiler 3 (HRST i.e. Heat Recovery Steam Generator). The steam drives steam turbine 2 and is used for ship heating purposes (12). Thermodynamic connection of gas turbine and steam turbine results in considerable increase of whole propulsion plant efficiency by utilisation of gas turbine exhaust gases energy.

2. THE FUEL USED IN COGES TYPE PROPULSION PLANTS

In COGES type propulsion plant the fuel is supplied to gas turbine only. Modern gas turbines can burn marine diesel oil (MDO), heavy fuel oil (HFO) and natural gas (NG). Heavy fuel oil commonly used on seagoing ships contains many harmful components as for example sulphur, vanadium, catalytic fines etc. As a result exhaust gases HFO origin contain substances from combustion harmful for environment i.e. carbon dioxide, carbon monoxide, sulphur oxides and nitrogen oxides and solid particles. Particularly harmful for environment are sulphur oxides and nitrogen oxides. Regarding environment protection and fuel system simplicity the natural gas is the most suitable fuel for seagoing ships. Exhaust gases of natural gas are the least harmful for environment. Frequently the natural gas is named "ecological fuel".

Comparison of harmful substances in exhaust gases of same power diesel engines fuelled with heavy fuel oil and natural gas are shown in figure 2. If the emission from diesel engine burning heavy fuel oil is assumed 100% then the emission from engine burning natural gas is reduced to [8]: for carbon dioxide 25%, for nitrogen oxides 85%, for sulphur oxides 100% and for solid particles 100%.

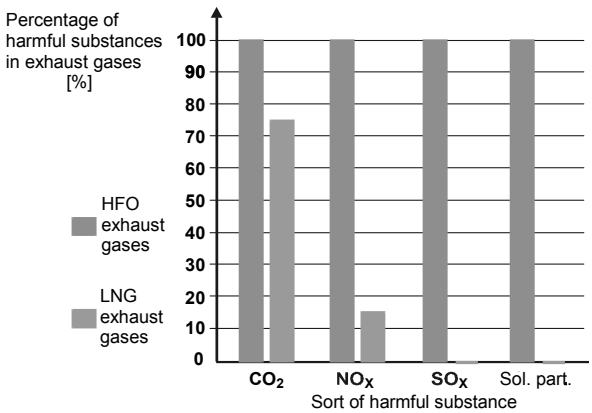

Fig. 2. Comparison of harmful substances in exhaust gases of diesel engine burning heavy fuel oil and natural gas [8]

Sulphur content in fuel is particularly essential. Regarding harmfulness of fuel containing sulphur to environment and human health a special control areas were established world wide. These areas are named SECA (Sulphur Oxide Emission Control Area). Ships sailing in SECA areas have to use low sulphur content fuels. Sulphur content in fuels outside SECA areas was also defined. Maximum limit of sulphur content in marine fuels and the date of being in force is stated in MARPOL Convention VI Amendment (fig. 3). From the beginning of 2015 sulphur content in marine fuel is not allowed (i.e. 0%) and outside of SECA areas is allowed only 0,5% from 2020.

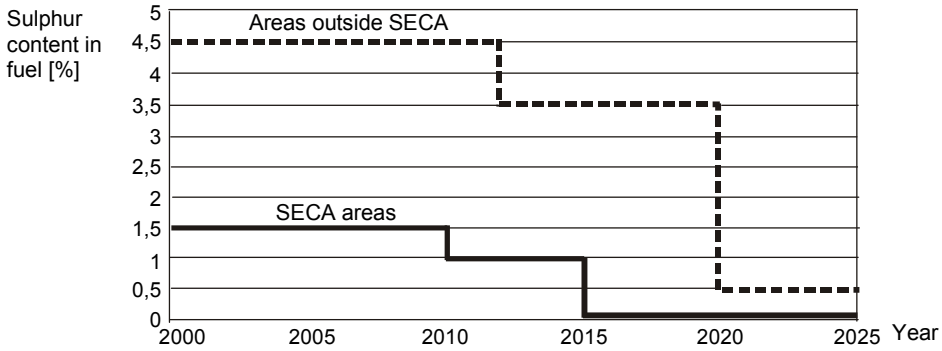

Fig. 3. Maximum limit of sulphur content in marine fuels according to MARPOL Convention

Low sulphur fuels are considerably more expensive than traditionally used fuels. Nowadays to lower operational costs ships use low sulphur fuels only in SECA areas. Outside of SECA areas more cheap fuels having higher sulphur content are used. The use of two grade fuels results in complication of ship fuel systems by necessity of fuel storage and settling tanks doubling. Maintenance activity of engine crew also increases. Application of natural gas makes possible to avoid these inconveniences because natural gas does not content sulphur. Additionally natural gas has 25% higher calorific value than heavy fuel oil (natural gas 52000 kJ/kg, heavy fuel oil 41000 kJ/kg) and market price of natural gas is lower than low sulphur fuel oil. Lower consumption of high calorific value fuel minimises carbon dioxide emission to atmosphere.

Having in view that LNG (Liquefied Natural Gas) fuel system of gas turbine is simple and does not need high pressures determinates use of natural gas in COGES type propulsion plant. In addition from 2015.01.01 ships will have to use low sulphur fuels or no sulphur fuels in SECA areas.

3. EFFICIENCY OF COGES TYPE PROPULSION PLANT

Efficiency of COGES propulsion plant depends on gas turbine exhaust gases energy utilisation rate. Energy of exhaust gases is used for generation of steam driving steam turbogenerator. The power of propulsion plant depends on ship deadweight and sailing speed. For example it is 25÷50 MW for ship of 120000÷150000 DWT.

Results of efficiency analysis for COGES propulsion plant (total power 49 MW) consisting of two gas turbine generators and one steam turbine generator (fig. 4) are shown in table 1 [1, 2, 3]. Efficiency depends on power distribution between gas and steam turbines. High rate of exhaust gases utilisation results in higher steam generation allow achievement of efficiency equal and even higher than the same of diesel engine (now for diesel engine about 50÷51%). Analysis carried out appoint possibility of about 60% efficiency of marine COGES propulsion plants [4]. Nowadays, shore power stations working in COGES system with constant load achieve efficiency 60%. Competitive in efficiency can be diesel engine connected with steam turbine driven by steam generated in waste heat boiler [4] but under condition that diesel engine burns heavy fuel oil and COGES system is fed with marine diesel oil. If natural gas is applied the competition is won by COGES system.

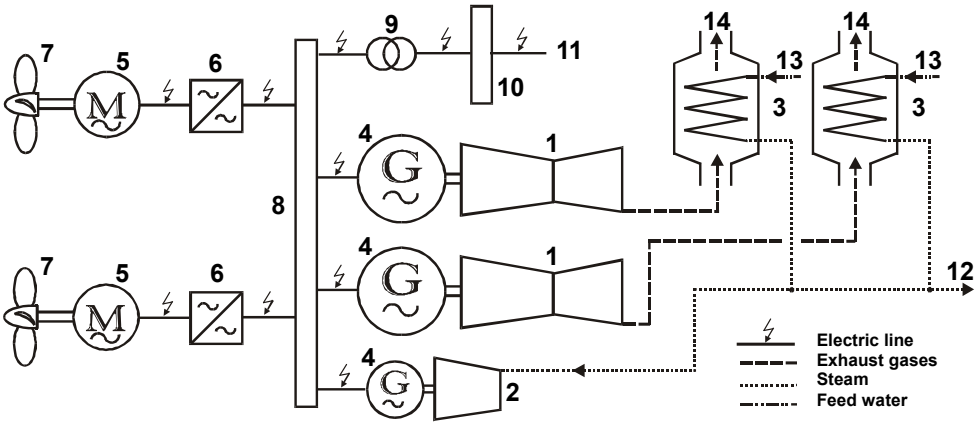

Fig. 4. COGES type marine propulsion plant
(version: 2 gas turbines, 1 steam turbine, 2 ship propellers)

1 – gas turbine; 2 – steam turbine; 3 – waste heat boiler; 4 – generator; 5 – electric motor; 6 – frequency converter; 7 – propeller; 8 – high voltage switchboard; 9 – transformer; 10 – low voltage switchboard; 11 – ship network supply; 12 – heating steam; 13 – feed water; 14 – exhaust gases outlet

Tab. 1. Influence of power distribution between gas turbines and steam turbine on fuel consumption and efficiency for COGES propulsion system using natural gas

Power distribution between gas turbines and steam turbine N_{GT}/N_{ST} [%]	**85/15**	**80/20**	**75/25**	**70/30**	**65/35**
Power of gas turbines [kW]	2 x 20868	2 x 19640	2 x 18413	2 x 17185	2 x 15958
Power of steam turbine [kW]	7365	9820	12275	14730	17185
Specific gas fuel consumption of COGES system [kg/kWh]	0,157	0,148	0,139	0,130	0,120
Efficiency of COGES system [%]	44,0	46,8	49,9	53,5	57,6

Gas turbine performs the highest efficiency in the range of full load. For partial load the efficiency of gas turbine considerably drops. During ship operation the partial load of main propulsion plant is frequent. COGES propulsion plant can be designed in the way to obtain high efficiency also at partial load. Power of gas turbines is to be properly diversified. For example if total power of the plant is 49MW and power distribution between gas turbines and steam turbine 70/30 (tab. 1) the power of gas turbines can be 22MW and 12,4MW (fig. 5). This way three combinations of propulsion power can be executed. At each combination gas turbines can operate under full or nearly full load. Such a combination increases operational elasticity and efficiency of propulsion plant.

High manoeuvrability and better living conditions of people on board (crew, passengers) can be obtained by application of azipod propulsors (fig. 5). Azipod propulsors besides ship propulsion are very effective steering gear. Use of azipod propulsors eliminates propulsion shafting, which is the source of hull vibrations.

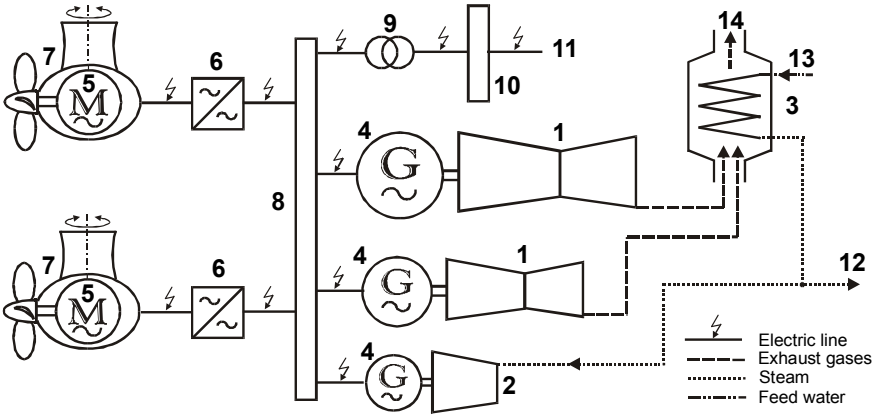

Fig. 5. Marine COGES type propulsion plant
(version 2 different power gas turbines, 1steam turbine and 1 waste heat boiler)

1 – gas turbine; 2 – steam turbine; 3 – waste heat boiler; 4 – generator; 5 – electric motor; 6 – frequency converter; 7 – azipod propulsor; 8 – high voltage switchboard; 9 – transformer; 10 – low voltage switchboard; 11 – ship network supply; 12 – heating steam; 13 – feed water; 14 – exhaust gases outlet

4. PROPOSAL OF MARINE COGES TYPE PROPULSION PLANT OPERATING ON NATURAL GAS

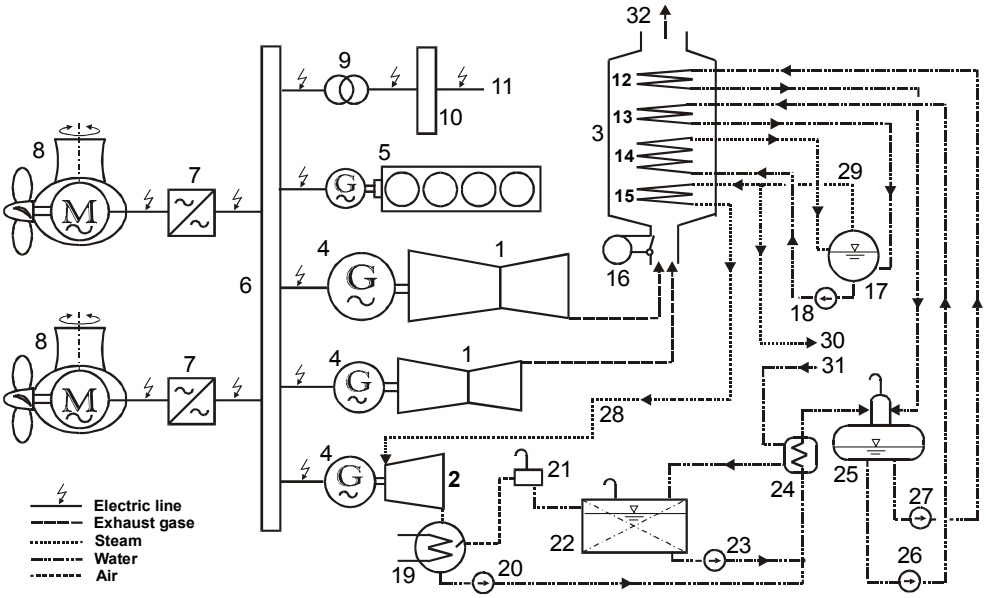

Fig. 6. Proposal of marine COGES propulsion plant

1 – gas turbine; 2 – steam turbine; 3 – waste heat boiler; 4 – generator; 5 – emergency dieselgenerator; 6 – high voltage switchboard; 7 – frequency converter; 8 – azipod propulsor; 9 – transformer; 10 – lower voltage switchboard; 11 – ship network supply; 12 – deaerator water heater; 13 – feed water heater (economizer); 14 – boiler evaporation coil; 15 – superheater; 16 – auxiliary burner; 17 – steam drum; 18 – circulation pump; 19 – condenser; 20 – condensate pump; 21 – condenser vacuum system; 22 – atmospheric drain tank; 23 – atmospheric drain tank pump; 24 – low pressure heater; 25 – deaerator; 26 – feed pump; 27 – deaerator circulating pump; 28 – superheated steam inlet into turbine; 29 – saturated steam from steam drum; 30 – heating steam supply; 31 – heating steam condensate return; 32 – exhaust gases outlet

Discussion of COGES plant efficiency (executed in point 2) indicates that possible to obtain power of steam turbine is the most important (table 1). Design works should concentrate on application of the most modern constructions. For example Semi-Curtis control stage of steam turbines has 4% higher efficiency than traditional Curtis wheel [7]. Steam turbine should be condensate type i.e. steam exhaust should go to vacuum condenser and turbine should be supplied by superheated steam. Waste heat boiler should be properly designed as well as configuration of water-condensate system. Waste heat boiler (fig. 6) consists of four heating sections: feed water heater (economizer) 13, evaporator 14, superheater 15 and deaerator water heater 12. This way gas turbines exhaust gases energy can be properly utilised [6].

Steam system shown in figure 6 is single pressure type. Higher efficiency can be obtained in double pressure system where the turbine is driven by higher pressure steam and heating steam system operates at lower pressure. But such a system increases investment costs, complicates waste heat boiler construction and makes operational difficulties for engine crew. In single pressure system shown in figure a number of means for increase efficiency verified in steam turbine propulsion plants are implemented. Deaerator 25 in turbine propulsion plant is direct contact type heater using auxiliary machines exhaust steam for feed water heating. In case of COGES system deaerator is heated by gas turbines exhaust gases. Pump 27 draws in water from deaerator and presses it through heating coil 12 of waste heat boiler. Hot water is subjected to intensive deaeration. Boiler feed pump 26 discharges preheated water to economizer 13 thus intensifying evaporation in boiler. Circulation pump 18 presses water from drum 17 through boiler evaporation coils 14. Mixture of steam and water returns to drum. The saturated steam is led to superheater 15 and next to steam turbine. Some amount of saturated steam is directed to heating steam receivers by inlet 30. Condensate of heating steam from outlet 31 are used for heating the condensate from turbine condenser in low pressure heater 24 thus increasing efficiency of the system.

The plant is provided with emergency dieselgenerator 5.

Precise heat balance makes possible to determine configuration and power of plant elements.

CONCLUSIONS

COGES propulsion plant using natural gas as a fuel is the future of marine propulsion for the sake of:

- application of natural gas – “ecological fuel” for seagoing ships propulsion contributes to sea environment protection,
- high efficiency of COGES propulsion system comparable or even higher than diesel engine propulsion,
- low costs of lubricating oil, overhauls, repairings and amortization comparing to diesel engines,
- modular design,
- easy automation,
- operational elasticity,
- high manoeuvrability due to azipod propulsors,
- high reliability, long overhaul periods, lower costs of overhauls, lower costs of reparings and spare parts comparing to diesel engine propulsion,

- simple main propulsion servicing system, particularly fuel treatment systems; according to [5] typical COGES system of passenger cruiser is equipped with about ninety less important engine room machines, about thirty less pumps, 5600 metres less of pipelines and 350 less valves i.e. about 150 tons of total weigh and about 800 automation points less than traditional diesel electric propulsion,
- no need of separate auxiliary generator sets,
- considerably smaller up to 30% volume and weight engine room comparing to other propulsion plants; possibility of gas turbine sets location on higher storeys of engine room and benefit of additional cargo space,
- considerably smaller investment costs of propulsion plant up to 40% comparing to other types of propulsion,
- possibility of use boiled off cargo for ship propulsion on LNG carriers (Liquefied Natural Gas Tankers).

REFERENCES

[1] Cwilewicz R., Górski Z., *Proposal of turbine propulsion for a new generation liquefied natural gas carrier with a capacity of 250000 – 300000 cbm.* 33rd International Scientific. Congress on Powertrain and Transport Means, European Kones 2007. Warsaw Poland. 9–12 September 2007. Journal of Kones Powertrain and Transport, European Science Society of Powertrain and Transport Publication, Vol. 14, No. 2, Warsaw 2007.

[2] Cwilewicz R., Górski Z., *Turbine propulsion of seagoing vessels as the alternative for diesel engines.* Akademia Morska Gdynia, Hochschule Bremerhaven, Joint Proceedings, No. 20 August 2007.

[3] Cwilewicz R., Górski Z., *Proposal of ecological propulsion plant for LNG carries supplying liquefied natural gas to Świnoujście terminal.* Journal of Polish Cimac, Energetic aspects, Vol. 6, No. 1, Gdańsk 2011.

[4] Dzida M., Olszewski W., *Comparing combined gas turbine/steam turbine and marine low speed piston engine/steam turbine systems in naval applications.* Polish Maritime Research 4(71) 2011 Vol. 18.

[5] General Electric., *GE Outlines Advantages of LM Aeroderivative-Based COGES System for Cruise Ships at Seatrade Cruise Shipping Convention.* Seatrade Cruise Shipping Conference. MIAMI, Florida, March 13, 1997

[6] Górski Z., Giernalczyk M., *Siłownie Okrętowe, Część II, Instalacje okrętowe.* Wydawnictwo Akademii Morskiej w Gdyni, Gdynia 2012.

[7] Kawasaki UA Turbine. Kawasaki Heavy Industries, Ltd.

[8] McArtur R., Gas-fuelled mechanical solutions offer major emissions reductions. Wärtsilä Stakeholder Magazine, Twentyfour7, 01.2011.